Optimal Cost Reduction in Electric Vehicles Charge Discharge Scheduling while Maximizing User Satisfaction

Sapna Kushwah, Avadh Kishor and Pramod Kumar Singh, *Member, IEEE,*

***Abstract*—The rapid electrification of transportation has intensified the need for intelligent and coordinated charging scheduling to ensure the reliable operation of power systems. With the growing number of electric vehicles (EVs), efficient charging discharging coordination in parking lots has become a critical challenge, particularly when the number of charging points are smaller than the number of parked vehicles. This paper proposes a two stage optimization framework that integrates Priority Scheduling (PS) and a Genetic Algorithm (GA) to manage EV charging and discharging in such constrained environment while minimizing energy cost, battery degradation, and grid load variance enhancing user satisfaction. The integrated multi objective model effectively balances the conflicting interests of the grid operator and EV users, ensuring fair resource utilization and stable operation. Simulation results on fleet upto 300 EVs demonstrate that the proposed approach converges with better tradeoffs for all objectives simultaneously as compared to deterministic methods like FCFS and SJF.**

***Index Terms*—Electric Vehicle, Priority Scheduling, Genetic Algorithm, vehicle-to-Grid, Grid-to-Vehicle**

I. Introduction

IN the twenty first century, the rapid escalation of greenhouse gas (GHG) emissions from transportation has become a global concern, as it continues to drive the rise in average global temperatures. In view of this alarming trend, sustainable mobility solutions are required; therefore electric vehicles (EVs) have emerged as one of the most significant solution to reduce carbon emissions. However, the increasing penetration of EVs has introduced new opportunities and challenges for modern power systems. In the wake of this transition, the expansion of public and private charging stations has accelerated worldwide and has doubled since 2022 to exceed 5 million. Neverthless, more public chargers are needed to support mass adoption of EVs, particularly among segments of the population without access to home chargers [1].

Consequently, in this view, parking lots especially those at workplaces, commercial centers, residential complexes have become ideal locations for EV charging, as vehicles typically remain parked for long periods during the day. This extended dwell time, therefore provides a practical opportunity to recharge EVs without requiring dedicated stops at public charging stations. With large scale EV adoption, such parking slots transformed into dynamic energy hubs that can either draw power or supply power to the grid through vehicle-to-grid (V2G) and grid-to-vehicle (G2V) interactions [2]. While this flexibility enhances grid reliability and enables energy management, uncoordinated charging and discharging of numerous EVs can, therefore lead to load fluctuations, battery degradation, increased operational costs and user dissatisfaction. Thereby, intelligent scheduling mechanisms are essential to manage the dual roles of EVs as both energy consumers and distributed storage units.

A key challenge, particularly, in public and workplace parking lots, arises because the number of EVs are comparatively higher than the limited availability of charging points. This situation introduces two interconnected optimization problems: (i) the assignment of vehicles to charging points based on priority or utility, and (ii) the determination of optimal charging and discharging power for each assigned EV within its parking duration. Addressing these coupled problems requires strategies that simultaneously minimizes cost, grid load variance, while, enhancing user satisfaction thereby respecting operational constraints.

The objectives of minimizing energy cost, battery degradation, balancing grid load, and maximizing user satisfaction are inherently conflicting in an EV charging and discharging environment. In view of dynamic electricity pricing, reducing charging cost favors charging during low tariff periods; however this practice can create new local demand peaks and increase grid stress. At the same time, frequent charging or V2G discharging, which supports grid balance accelerates battery aging. Similarly, strategies that prioritize cost minimization or load balancing, may delay charging and as a result, compromise the user's desired state-of-charge (SoC) at departure. Therefore, in the wake of these competing requirements, these interdependent objectives must be jointly optimized within a unified multi objective framework to balance trade-offs among economic efficiency, battery health, grid stability, and user comfort.

Therefore, this paper formulates the EV charging and discharging scheduling problem as a multi-objective optimization task that explicitly accounts for the conflicting interests of the grid, the charging infrastructure, and EV users. The proposed framework simultaneously aims to minimize the total charging cost under dynamic electricity pricing, reduce battery degradation caused by frequent charging and discharging operations, and smooth grid load variations to enhance system stability, while ensuring higher level of user satisfaction by meeting individual SoC requirements within the available parking

A. Kishor and P. K. Singh are with the Department of Computer Science and Engineering, ABV-Indian Institute of Information Technology and Management, Gwalior, India, e-mail: (akishor@iiitm.ac.in, pksingh@iiitm.ac.in).

duration. We summarize the following contributions below:

- We formalize the mathematical models for energy cost, battery degradation, grid load variance and user satisfaction for the constrained parking lot scenario under time-of-use pricing.
- We integrate the above defined objectives into a single weighted sum objective function and formulate the problem along with constraints.
- We propose a novel two stage method in which a priority scheduling mechanism first allocates limited charging stations to competing EVs based on preferences (depends on arrival time, departure time and SoC urgency), followed by a Genetic Algorithm that optimally determines charging and discharging power for assigned EVs.
- We conduct extensive experimental analysis to demonstrate the effectiveness of our proposed two stage framework with better tradeoffs for all objectives, and converges robustly with increasing fleet sizes.

The remainder of this paper is organized as follows. The relevant literature review on charging scheduling is provided in Section II. The system overview and description of the problem are presented in Section III, while the final problem statement and formulation are given in Section IV. The details of the proposed two stage framework are presented in Section V. The experimental results and their interpretation are given in Section VI, while the paper concludes with future directions in Section VIII.

II. Related work

Research on EV charging scheduling has evolved from centralized, static control mechanisms toward more adaptive intelligent, user responsive, and infrastructure aware scheduling approaches [3]–[5]. Early studies such as [6] provides one of the foundational formulations for optimal EV charge discharge scheduling to minimize total energy cost using convex optimization. Similarly in [7] proposed on off scheduling schemes for power constrained stations, introducing fundamental insights into resource allocation when only a limited number of EVs can charge simultaneously. Subsequent works extended these ideas with optimization based approaches. For instance, [8] applied a mixed integer linear programming (MILP) model, [9] applied metaheuristic algorithm to optimize V2G scheduling considering battery degradation as a crucial constraint with calendar and cycle aging, and [10] minimized energy cost and load variance simultaneously using multiobjective CSO algorithm, while [11] developed an improved opportunity based algorithm to coordinate G2V and V2G modes.

As system scale increased, decentralized and intelligent coordination methods gained attention, particularly to handle large parking lot scenarios. The semi decentralized real time scheduling scheme by [12] addressed uncertain arrival and departure patterns, while a cooperative multi agent framework in [13] regrouped EVs with differentiated deadlines for fairness and scalability. In a similar direction, [14] introduced a robust bilevel load management model that considers human choice uncertainty in response to location and time varying prices. Moreover [15] used reinforcement learning with EV clusters to optimize the charging and discharging strategies, thereby enabling adaptive decision making under uncertainty.

Parallel to these developments, user centric strategies emerged as an important dimension. The fair enough charging model is introduced in [16] where user satisfactionis considered to balance fairness and efficiency, whereas in [17] the IGSAPSO algorithm is developed by improving traditional PSO with hybridizing gravitational search for better convergence in ordered charging and discharging. Moreover, in [18] MDP based V2G control approach provided a probabilistic framework to handle vehicle mobility and stochastic energy states in microgrids. [19] presented an online charging framework based on time of use pricing and peak load minimization, introducing efficient heuristics that use the greedy choice property for dynamic scheduling under uncertainty. Extending this, [20] formulated a bilevel routing and charging problem with spatio temporal electricity pricing and incentivizing customers, highlighting how user flexibility can be monetized to enhance system efficiency, while [21] explored coordinated charge discharge scheduling for load curve shaping, demonstrating the potential of EVs as distributed energy resources for peak shaving. Moreover, [22] developed a multi agent priority GA model for commercial parking lots, combining fairness based priority allocation with evolutionary optimization of charge/discharge intervals. some researchers also applied ML based predictive analysis of EV users behaviour to minimize the similar objectives [23][24], while [25] used double Q-learning along with multiobjective PSO considering user cost, load fluctuation, and carbon emission reduction.

Collectively, these works underline the transition from static optimization toward intelligent, user responsive, and infrastructure aware scheduling approaches, yet no work explicitly address the joint problem of charger assignment and power optimization in constrained parking environments. Most existing EV scheduling works assume either unlimited chargers or fixed charger assignment, thereby optimizing only power schedules. However, in realistic workplace parking lots where $N > M$, charger assignment itself becomes a bottleneck decision that directly affects user satisfaction, degradation, and cost. This paper explicitly models and solves these two tightly coupled decision layers.

To address this gap, the present work introduces a two-stage framework, where the first stage allocates chargers based on multi-criteria priority scheduling, and the second uses GA to optimize charging/discharging power considering cost, degradation, grid balance, and user satisfaction simultaneously. This structure offers an interpretable, flexible, and energy efficient solution for realistic parking environment.

III. System Model and Problem Formulation

A. System Overview and terminologies

We consider a workplace parking lot equipped with M charging points and accommodating $N\ EVs$, where generally $N > M$. Each EV $i \in \mathbb{N} = \{1, 2, \ldots, N\}$ arrives at the parking facility at time T_i^{arr} and departs at T_i^{dep}, with a maximum battery capacity E_i^{cap}, initial SoC SoC_i^{init} at

the time of arrival, expected SoC range $[SoC_i^{min}, SoC_i^{max}]$ where SoC_i^{max} is the prefered energy level with maximum user satisfaction at departure. The system operates over a 12 hour working time from 8 AM to 8 PM, discretized into $T = 48$ equal intervals of 15 min each, indexed by $t \in \mathbb{T} = \{1, 2, \ldots, T\}$.

Let $\mathbb{M} = \{1, 2, \ldots, M\}$ denote the set of available charging points (CP). Each CP supports both charging and discharging (bidirectional operation). The Power limits for each EV are supposed to be in the range between $P_i^{\text{dis,min}}$ and $P_i^{\text{ch,max}}$, with $P_i^{\text{dis,min}} \leq p_{i,t} \leq P_i^{\text{ch,max}}, \quad \forall i \in \mathbb{N}, \forall t \in \mathbb{T}$ where $p_{i,t}$ is the power (positive for charging, negative for discharging) assigned to EV i at time t.

The objective is to determine a feasible charging/discharging schedule and CP assignment such that the energy demands of all EVs are met within their stay period. The Overall objective is to minimize a multi objective cost function comprising system level cost, battery degradation cost, and grid load variance, while maximizing user satisfaction, ensuring feasibility constraints, and limited charger availability.

B. Net Charging/Discharging Cost Model

Each EV i pays for the energy it consumes (charging) and generate revenue for the energy it gives back to the grid (discharging), based on the time of use electricity price π_t (in \$/kWh) and discharging revenue rate π_t^{rev} (in \$/kWh) at each time slot t. We aim to minimize the total energy cost incurred due to EV charging and discharging during its stay, while dynamically assigning chargers and ensuring that charging and discharging do not occur simultaneously. To ensure only actively connected EVs are considered, we define the charger assignment indicator $z_{m,i,t} \in \{0, 1\}$, which equals 1 if EV i is assigned to charger m at time t. The net cost function is defined as:

$$F_1(p_{i,t}, z_{m,i,t}) = \sum_{i=1}^{N} \sum_{t=1}^{T} \Big(\pi_t^{buy} \cdot \max(p_{i,t}, 0) + \pi_t^{\text{rev}} \cdot \min(p_{i,t}, 0) \Big) \cdot \Delta\delta \cdot \Big(\sum_{m=1}^{M} z_{m,i,t} \Big) \quad (1)$$

where: $p_{i,t}$ is the power (positive for charging, negative for discharging) assigned to EV i at time t, $\Delta\delta$ is the duration of each time slot (in hours), and this value $\sum_{m=1}^{M} z_{m,i,t} = 1$ ensures whether EV_i is connected to any charger at time t.

1) Battery Degradation Cost Model: Battery degradation is a critical factor in long term EV operation and V2G economics. Frequent charging and discharging cycles accelerate battery wear, reducing the usable capacity and shortening the overall battery lifespan. To calculate this, we model the degradation cost as a function of the total absolute energy exchanged by the EV during charging/discharging.

The total degradation cost for all EVs over the scheduling horizon is defined as:

$$F_2(p_{i,t}, z_{m,i,t}) = \sum_{i=1}^{N} \sum_{t=1}^{T} c_i^{\text{deg}} \cdot |p_{i,t}| \cdot \Delta\delta \cdot \left(\sum_{m=1}^{M} z_{m,i,t} \right) \quad (2)$$

where $|p_{i,t}|$ captures both charging and discharging energy, which ensures that both charging and discharging are penalized equally, as both contribute to battery aging regardless of direction. Here, c_i^{deg} is a degradation cost coefficient (in \$/kWh) that quantifies the estimated long term cost of battery wear per unit of energy transferred, defined as:

$$c_i^{\text{deg}} = \frac{C_i^{\text{battery}}}{L_i^{\text{cycle}} \times E_i^{\text{cap}}} \quad (3)$$

where C_i^{battery} represents the battery replacement cost of EV i (in \$), L_i^{cycle} denotes the battery cycle life of EV i measured in full cycles, and E_i^{cap} is the battery capacity of EV i in kWh. The coefficient c_i^{deg} gives the battery degradation cost per kWh for EV i (in \$/kWh). For example, if $C_i^{\text{battery}} = 3,00,000$ \$, $L_i^{\text{cycle}} = 10000$ cycles, and $E_i^{\text{cap}} = 60$ kWh, then $c_i^{\text{deg}} = \frac{3,00,000}{10000 \times 60} = 0.5$ \$/kWh. This value gives the effective degradation cost of the battery for every kWh of energy charged or discharged.

Remark 1. *While many nonlinear aging models exist, a simple linear energy throughput based degradation model is adopted here for simplicity and consistency with recent studies[8], [17].*

C. Grid Load Variance Model

The grid load variance computes fluctuations in the aggregated EV load over the scheduling horizon defined as:

$$F_3(p_{i,t}) = \sum_{t=1}^{T} \big(L_t - \bar{L}\big)^2 = \sum_{t=1}^{T} \left(\sum_{i=1}^{N} p_{i,t} - \frac{1}{T} \sum_{t'=1}^{T} \sum_{i=1}^{N} p_{i,t'} \right)^2. \quad (4)$$

where, $p_{i,t}$ denotes the net power of EV i at time slot t, the total EV load L_t at time t and the average load $\bar{L}$ across T slots are given as follows:

$$L_t = \sum_{i=1}^{N} p_{i,t}, \quad (5)$$

$$\bar{L} = \frac{1}{T} \sum_{t'=1}^{T} \sum_{i=1}^{N} p_{i,t'}. \quad (6)$$

The equation 4 measures how much the total demand from EV charging and discharging changes over time. A high variance means there are sharp peaks and dips in the load curve, while a low variance indicates a smoother and more stable demand. For system operators, keeping this variance low is important for reliable and efficient grid operation. In EV scheduling, this term links all EVs by encouraging them to avoid charging at the same time. By penalizing large demand fluctuations, it promotes off peak and staggered charging, helping to balance the overall load.

D. User Sensitivity and Satisfaction Model

In the context of coordinated EV charging, user satisfaction refers to how closely the achieved SoC at the end of the charging schedule. The idea is that the closer an EV reaches its maximum SoC, the more satisfied the user will be. On arrival,

we quantify each user's sensitivity (urgency) by SoC required to reach the vehicle's maximum acceptable SoC within the parked duration. Below are the steps to calculate satisfaction score $S_i \in [0,1]$ for each EV i based on the urgency of its charging requirement.

Step 1: Energy required to meet target SoC: Let $\mathrm{SoC}_i^{\mathrm{init}}$, $\mathrm{SoC}_i^{\max}$, and $\mathrm{SoC}_{i,T}$ denote the arrival, target, and final SoC, respectively. Also, we have E_i^{cap} (kWh) be the battery capacity, then required energy to reach the target $\mathrm{SoC}_i^{\max}$ will be:

$$E_i^{\mathrm{req}} = \max\left(0,\ \mathrm{SoC}_i^{\max} - \mathrm{SoC}_i^{\mathrm{init}}\right) \times E_i^{\mathrm{cap}} \tag{7}$$

Step 2: Average power requirement: Let T_i^{arr} and T_i^{dep} denote the arrival and departure times (in hours), and:

$$T_i^{\mathrm{stay}} = T_i^{\mathrm{dep}} - T_i^{\mathrm{arr}} \tag{8}$$

The average charging power needed to meet the target within the stay duration is:

$$P_i^{\mathrm{req}} = \begin{cases} \frac{E_i^{\mathrm{req}}}{T_i^{\mathrm{stay}}}, & T_i^{\mathrm{stay}} > 0, \\ \infty, & \text{if } T_i^{\mathrm{stay}} = 0 \text{ and } E_i^{\mathrm{req}} > 0 \end{cases} \tag{9}$$

Step 3: sensitivity calculation: Let $P_{\mathrm{ref}} > 0$ be a reference charging power (e.g., typical charger rating). The normlized sensitivity is then defined as:

$$\phi_i = \min\left(1,\ \frac{P_i^{\mathrm{req}}}{P_{\mathrm{ref}}}\right), \quad \phi_i \in [0,1] \tag{10}$$

Step 4: Normalized SoC deviation on departure: If the target SoC does not met, the normalized SoC deviation is:

$$\delta_i = \begin{cases} 0, & \mathrm{SoC}_{i,T} \geq \mathrm{SoC}_i^{\max}, \\ \frac{\mathrm{SoC}_i^{\max} - \mathrm{SoC}_{i,T}}{\mathrm{SoC}_i^{\max} - \mathrm{SoC}_i^{\mathrm{init}}}, & \mathrm{SoC}_{i,T} < \mathrm{SoC}_i^{\max} \end{cases} \tag{11}$$

where the denominator is assumed > 0 for simplicity; it means Evs will always arrives with lesser SoC than target SoC.

Step 5: Satisfaction score: Finally, the satisfaction score is computed as:

$$S_i = \max\left(0,\ 1 - \phi_i\,\delta_i\right) \tag{12}$$

Example: For $E_i^{\mathrm{cap}} = 60\,\mathrm{kWh}$, $\mathrm{SoC}_i^{\mathrm{init}} = 0.20$, $\mathrm{SoC}_i^{\max} = 0.90$, $T_i^{\mathrm{stay}} = 5\,\mathrm{h}$, and $P_{\mathrm{ref}} = 7\,\mathrm{kW}$:

$$\begin{aligned} E_i^{\mathrm{req}} &= 0.70 \times 60 = 42 \text{ kWh}, \\ P_i^{\mathrm{req}} &= 42/5 = 8.4 \text{ kW}, \\ \phi_i &= \min(1, 8.4/7) = 1, \\ \delta_i &= (0.90 - 0.50)/(0.90 - 0.20) \approx 0.5714, \\ S_i &\approx 1 - (1)(0.5714) \approx 0.429. \end{aligned}$$

This $S_i \approx 0.429$. shows that, user is 42% satisfied, as it needs more power (i.e 8.4KW) to reach the target, but it is not possible because it is greater than rated power rating. hence it get overall 40% reduced SoC on departure. since, our objective is to maximize the total satisfaction of all EVs after the charging/discharging scheduling is done, can be formally defined as:

$$F_4(\mathrm{SoC}_{i,T}) \ = \ \sum_{i=1}^{N} S_i \tag{13}$$

IV. MultiObjective problem Formulation for EV charging/discharging

A. Decision variables and notation

Definition 1 (Charger assignment variable)**.** *It is a binary variable that indicates whether EV i is assigned to charger m at time t:*

$$z_{m,i,t} = \begin{cases} 1: & \textit{if EV}_i \textit{ is assigned to charger } m \textit{ at slot } t, \\ 0: & \textit{otherwise.} \end{cases} \tag{14}$$

Definition 2 (Power variable)**.** *It is the net power (kW) assigned to EV i at time slot t:*

$$p_{i,t} \in \mathbb{R}, \qquad \begin{cases} p_{i,t} > 0: & \textit{charging}, \\ p_{i,t} < 0: & \textit{discharging}. \end{cases} \tag{15}$$

Definition 3 (State-of-charge (SoC))**.** *It is the state-of-charge of EV i at the end of slot t:*

$$\mathrm{SoC}_{i,t} \in [0,1], \tag{16}$$

B. Objective functions

Using the above decision variables, we define four objectives which are simultaneously minimized

1) *minimization of Net charging/discharging cost :*

$$\begin{aligned} F_1(p_{i,t}, z_{m,i,t}) = \min \sum_{i=1}^{N}\sum_{t=1}^{T} \Big(\pi_t \cdot \max(p_{i,t}, 0) \\ + \ \pi_t^{\mathrm{rev}} \cdot \min(p_{i,t}, 0)\Big) \cdot \Delta\delta \cdot \Big(\sum_{m=1}^{M} z_{m,i,t}\Big) \end{aligned} \tag{17}$$

2) *minimization of battery degradation cost :*

$$\begin{aligned} F_2(p_{i,t}, z_{m,i,t}) = \min \sum_{i=1}^{N}\sum_{t=1}^{T} c_i^{\mathrm{deg}}\ |p_{i,t}|\ \Delta\delta \\ \times \Big(\sum_{m=1}^{M} z_{m,i,t}\Big). \end{aligned} \tag{18}$$

3) *Minimization of Grid load variance:*

$$\begin{aligned} F_3(p_{i,t}) = \min \sum_{t=1}^{T} \Big(L_t - \bar{L}\Big)^2, \\ L_t = \sum_{i=1}^{N} p_{i,t}, \qquad \bar{L} = \frac{1}{T}\sum_{t'=1}^{T}\sum_{i=1}^{N} p_{i,t'}. \end{aligned} \tag{19}$$

4) *Maximization of total user satisfaction :* when $S_i \in [0,1]$ be the satisfaction of EV i (higher is better). We minimize negative satisfaction.

$$F_4(\mathrm{SoC_{i,T}}) = -\min \sum_{i=1}^{N} S_i(\mathrm{SoC}_{i,T}). \tag{20}$$

- **Constraints:** To ensure feasible and reliable EV charging and discharging schedules, we define the following set of constraints that support the previously described multi objective cost function.

  C1 : $P_i^{\mathrm{dis,min}} \leq p_{i,t} \leq P_i^{\mathrm{ch,max}}, \quad \forall i, t$

C2 : $\sum_{m=1}^{M} z_{m,i,t} \leq 1 \quad \forall i, t$
C3 : $\sum_{i=1}^{N} z_{m,i,t} \leq 1 \quad \forall m, t$
C4 : $p_{i,t} = 0, \quad \text{if } \sum_{m=1}^{M} z_{m,i,t} = 0$
C5 : $\mathrm{SoC}_i^{\min} \leq \mathrm{SoC}_{i,t} \leq \mathrm{SoC}_i^{\max}$
C6 : $\sum_{j \in \mathcal{C}} p_j^{req}(t) \leq P_{max}$

The interpretation of the above constraints is in order. Constraint **C1** restricts the charging and discharging power of each EV within its allowable physical limits. This ensures that no EV exceeds its maximum charging capability or discharging rate. **C2** enforces that an EV can occupy at most one charger in a given time slot. **C3** guarantees that each charger can serve only one EV at a time. **C4** links the power decision with charger allocation. If an EV is not assigned to any charger, its charging or discharging power must be zero. **C5** maintains the SoC of each EV within safe operational limits throughout the scheduling horizon, thereby preventing both overcharging and excessive battery depletion. **C6** ensures that the aggregate charging demand of all connected EVs at any slot does not exceed the grid's maximum capacity.

C. Weighted sum multiobjective problem formulation

To combine the four objectives into a single problem, each objective value F_k is first normalized and set of non negative weights w_k is assigned to each objective, such that $\sum_{k=1}^{4} w_k = 1$, where the weights represent the relative importance of each objective according to the preferences. The weighted sum optimization problem can then be expressed as:

$$\min \quad J(p_{i,t}, z_{m,i,t}, \mathrm{SoC_{i,T}}) = \sum_{k=1}^{4} w_k F_k \tag{21}$$
$$\text{subject to} \quad \text{constraints C1–C5,}$$

D. Problem statement

Given $\{N, M, T\}$, EV parameters $E_i^{\text{cap}}, \mathrm{SoC}_i^{\text{init}}, \mathrm{SoC}_i^{\max}, P_i^{\text{ch,max}}, P_i^{\text{dis,min}}\}$, energy prices $\{\pi_t^{buy}, \pi_t^{\text{rev}}\}$ and user requirements, find $\{p_{i,t}, z_{m,i,t}, \mathrm{SoC}_{i,t}\}$ that minimize J in (21) subject to C1–C5.

V. Proposed Two Stage Scheduling Framework

In order to solve the formulated EV charging/discharging scheduling problem in workplace parking, a two stage scheduling framework is proposed as shown in fig. 1. The first stage applies a priority based scheduling algorithm to ensure fairness and urgency aware charger assignment. The second stage refines the power allocation through a Genetic Algorithm (GA), minimizing costs and grid variance while maximizing user satisfaction. In order to set the foundation for comprehending the proposed framework, this section first discusses the background of priority scheduling and GA signifying the selection of these particular state of the art methods in this context.

A. Stage-I: Priority Scheduling

Priority scheduling is a classical real time decision making approach that ranks competing tasks according to defined priority criteria. It is lightweight, interpretable scheduling algorithm that can be used to decide which vehicles should access limited charging points at any given time, especially when the number of EVs exceeds available chargers. In the considered workplace parking scenario, EV users typically have common arrival and departure times, limited plug in duration, and heterogeneous energy requirements. A priority scheduling mechanism is therefore well suited for resolving charger assignment, ensuring urgent EVs are not left unserved. At the beginning of each slot t, a *priority score* $\lambda_i(t)$ is assigned to each EV i. The score reflects urgency, expected degradation, grid load conditions,and normalized price factor and is expressed as

$$\lambda_i(t) = w_s \phi_i(t) - w_d D_i^{\text{factor}}(t) - w_g G_t^{\text{factor}}(t) - w_p P_t^{\text{factor}} \tag{22}$$

where w_s, w_d, w_g, w_p are non negative weight coefficients with $w_s + w_d + w_g + w_p = 1$. Urgency factor $\phi_i(t)$ represents the urgency of EV i in achieving its target SoC before departure. It is derived from the satisfaction model defined above as $\phi_i(t) = \frac{p_i^{req}(t)}{p^{ref}}$, where p^{ref} is the charger rating, and $p_i^{req}(t)$ is the required average charging power for EV_i to reach its target SoC before departure. Degradation factor $D_i^{\text{factor}}(t)$ quantifies the expected contribution of EV_i to battery wear during charging/discharging. It is expressed as a normalized indicator calculated as

$$D_i^{\text{factor}}(t) = \frac{c_{\text{deg}} \cdot \Delta E_i - \min_j (c_{\text{deg}} \cdot \Delta E_j)}{\max_j (c_{\text{deg}} \cdot \Delta E_j) - \min_j (c_{\text{deg}} \cdot \Delta E_j)} \tag{23}$$

where c_{deg} is the degradation cost coefficient defined above, ΔE_i represents the maximum energy requirement, while *index j* explicitly states that j iterates over all EVs in slot t. Grid stress factor $G_t^{\text{factor}}(t)$ is a system level measure of aggregate charging demand relative to grid power limits, defined as

$$G_t^{\text{factor}}(t) = \max\left(0, \ \frac{\widehat{P}_{agg}(t) - \overline{P}(t)}{P_{max} - \overline{P}(t)}\right) \tag{24}$$

where $\widehat{P}_{agg}(t) = \sum_{j \in \mathcal{C}} p_j^{req}(t)$ is the estimated aggregate demand of all connected EVs $\mathcal{C}$, and $\overline{P}(t)$ is the average load profile, while P_{max} is the grid maximum operational power capacity. The value of G_t^{factor} will remain same for all EV in first slot. The price factor P_t^{factor} is obtained by normalizing the current price (including charging price π_t^{buy} and discharging price π_t^{rev}) using their respective tariff ranges:

$$P_t^{\text{buy}} = \frac{\pi_t^{buy} - \pi_{\min}^{\text{buy}}}{\pi_{\max}^{\text{buy}} - \pi_{\min}^{\text{buy}}}, \qquad P_t^{\text{rev}} = \frac{\pi_t^{\text{rev}} - \pi_{\min}^{\text{rev}}}{\pi_{\max}^{\text{rev}} - \pi_{\min}^{\text{rev}}}. \tag{25}$$

These two normalized price terms are then combined into a single price factor

$$P_t^{\text{factor}} = P_t^{\text{buy}} - P_t^{\text{rev}}, \quad P_t^{\text{factor}} \in [-1, 1] \tag{26}$$

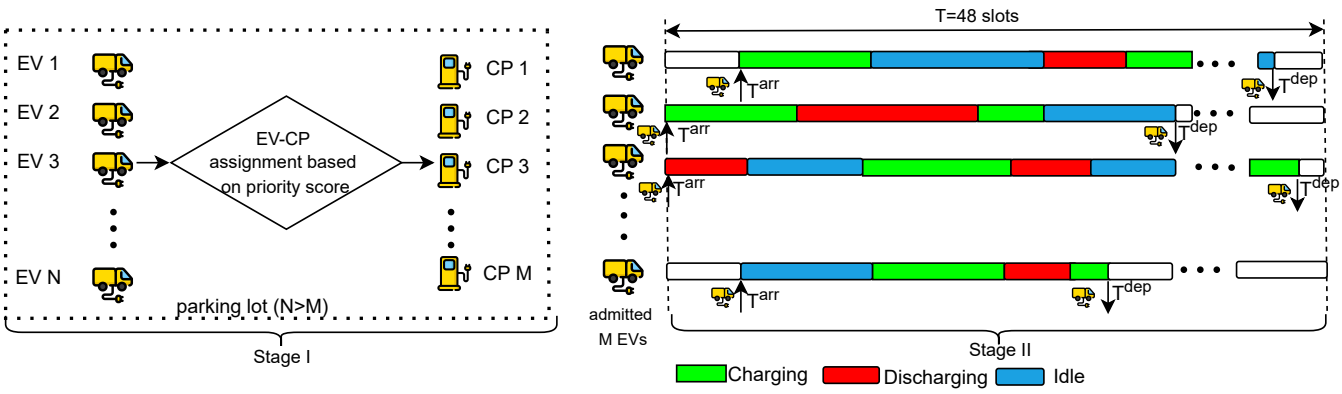

Fig. 1: Two stage scheduling of EV in Parking lot

which is positive when charging is relatively expensive (discouraging further charging) and negative when discharging is attractive (encouraging V2G participation). The price tfactor is system level and identical for all EVs in slot t.

Assignment rule: EVs are ranked in descending order of $\lambda_i(t)$, and the top M EVs are granted charger access. The connected EV will remain plugged unless release conditions are satisfied (i.e., target SoC is achieved, departure time arrives). Waiting EVs are admitted only when chargers are released.

1) Numerical example (Stage-I): No. of EVs = 3 and chargers = 2 with given system parameters and EV states shown in table I as follows:

- Slot duration: $\Delta\delta = 0.25$ h;
- Grid: $P_{\max} = 25$ kW, average load $\overline{P}(t) = 12$ kW.
- Degradation coefficient: $c_{\text{deg}} = 0.02$ \$/kWh.
- Tariffs: $\pi_t^{buy} = 0.25$ \$/kWh, $\pi_t^{\text{rev}} = 0.18$ \$/kWh.
- Price ranges: $[\pi_{\min}^{\text{buy}}, \pi_{\max}^{\text{buy}}] = [0.10, 0.50]$, $[\pi_{\min}^{\text{rev}}, \pi_{\max}^{\text{rev}}] = [0.05, 0.30]$.
- $w_s = w_d = w_g = w_p = 0.25$(choosen equal for showing calculations)

TABLE I: EV states for the example

EV	E_i^{cap} (kWh)	SoC_{init}	$SoC_i^{\max}$	P_{ref} (kW)	T_i^{stay} (h)
EV1	60	0.30	0.80	7	4.0
EV2	40	0.60	0.90	11	1.0
EV3	50	0.20	0.60	7	6.0

a) Step 1 — Urgency factor: Remaining energy required using equation 7

$$\Delta E_1 = 30 \text{ kWh}, \quad \Delta E_2 = 12 \text{ kWh}, \quad \Delta E_3 = 20 \text{ kWh}.$$

Required average power using equation 9 :

$$p_1^{\text{req}} = 7.00 \text{ kW}, \quad p_2^{\text{req}} = 11.00 \text{ kW}, \quad p_3^{\text{req}} = 3.33 \text{ kW}.$$

Urgency factor using equation 10:

$$\phi_1 = 1.0, \ \phi_2 = 1.0, \ \phi_3 = 0.476.$$

b) Step 2 — Degradation factor for $EV_i = c_{deg}\Delta E_i$:

$$c_{\text{deg}}\Delta E_1 = 0.600, \ c_{\text{deg}}\Delta E_2 = 0.240, \ c_{\text{deg}}\Delta E_3 = 0.400.$$

Normalize D_i^{factor} for each EV using equation 23 :

$$D_1 = 1.000, \ D_2 = 0.000, \ D_3 = 0.444.$$

c) Step 3 — Grid stress factor: Aggregate demand:

$$\widehat{P}_{agg} = \sum_j p_j^{\text{req}} = 21.3333 \text{ kW}.$$

$$G_t^{\text{factor}} = \frac{\widehat{P}_{agg} - \overline{P}}{P_{\max} - \overline{P}} = \frac{21.3333 - 12}{25 - 12} = 0.7179.$$

d) Step 4 — Price factor: Normalize charge and discharge prices:

$$P_t^{\text{buy}} = \frac{0.25 - 0.10}{0.40} = 0.375, P_t^{\text{rev}} = \frac{0.18 - 0.05}{0.25} = 0.520.$$

Single price factor:

$$P_t^{\text{factor}} = P_t^{\text{buy}} - P_t^{\text{rev}} = 0.375 - 0.520 = -0.145.$$

e) Step 5 — Priority score for each EV:

$$\lambda_i(t) = 0.25\phi_i - 0.25D_i - 0.25G_t^{\text{factor}} - 0.25P_t^{\text{factor}}.$$

For EV1:

$$\lambda_1 = 0.2500 - 0.2500 - 0.17949 + 0.03625 = -0.14324.$$

For EV2:

$$\lambda_2 = 0.2500 + 0.0000 - 0.17949 + 0.03625 = 0.10676.$$

For EV3:

$$\lambda_3 = 0.11905 - 0.11111 - 0.17949 + 0.03625 = -0.13530.$$

f) Step 6 — Sorting of EVs and admission: The priority scores are:

$$\lambda_2 = 0.10676 > \lambda_3 = -0.13530 > \lambda_1 = -0.14324.$$

After sorting in descending order with $M = 2$ chargers, EV2 and EV3 are admitted; EV1 remains waiting. With equal weights the scheduler treats urgency, degradation, grid stress and price equally. As a result, EV3 (which has moderate energy demand but lower degradation than

EV1) is admitted instead of EV1 despite EV1's large energy requirement. EV2 remains top priority due to its short available time. This example highlights how weight selection affects admission hence equal weights reduces biased toward one parameter.

B. Stage-II: GA based Power Optimization

GA is a population based metaheuristic inspired by the principles of natural evolution. It is widely adopted for complex optimization problems where the search space is nonlinear and nonconvex, as in EV charging scheduling with multiple objectives and constraints. In this work, GA is employed after the priority based charger assignment to optimize the charging/discharging power levels of the admitted EVs over the scheduling horizon. This two stage design reduces computational complexity by limiting the GA search space to only those EVs granted access in Stage-I. The optimization problem expressed as minimizing a ojective function defined in equation 21 can be expanded as:

$$J = w_1 F_1 + w_2 F_2 + w_3 F_3 - w_4 F_4 \tag{27}$$

where F_1 represents the total charging cost under time of use prices, F_2 denotes the degradation cost associated with the assigned charging/discharging powers, F_3 measures the variance of the aggregate load profile, and F_4 quantifies user satisfaction. The following section discusses GA's next steps including initialization, crossover and mutation.

1) Encoding and Initialization: In the proposed framework, the charging and discharging schedules of all admitted EVs are encoded as real valued chromosomes. Each chromosome is a vector of length $M \times T$, where M is the number of admitted EVs and T is the number of discrete time slots in the planning horizon. The j-th gene of the chromosome corresponds to one decision variable $x_{i,t} = p_{i,t}$ (in kW) defined as

$$x_{i,t} = p_{i,t}, \quad \forall i \in \{1, \ldots, M\},\ t \in \{0, \ldots, T-1\} \tag{28}$$

where $p_{i,t}$ denotes the charging or discharging power of EV i at time slot t (in kW). A positive value ($p_{i,t} > 0$) indicates charging from the G2V, a negative value ($p_{i,t} < 0$) corresponds to discharging to the grid (V2G), and $p_{i,t} = 0$ represents idle status. For each EV, the per slot decision is bounded as $-P_{ref} \leq p_{i,t} \leq P_{ref}$ where p_{ref} denotes the rated maximum charging/discharging capacity of EV i. Furthermore, genes outside the EV's availability window, i.e., before arrival time T_i^{arr} or after departure time t_i^{dep}, are always set to zero. This ensures that no energy transaction is assigned outside the physical presence of the EV.

2) Fitness Evaluation: The quality of each chromosome is assessed using the fitness function that combines the four objectives considered here, (i) minimization of net energy cost (G2V purchase and V2G revenue), (ii) minimization of battery degradation cost, (iii) minimization of grid load variance, and (iv) maximization of user satisfaction. The corresponding objectives $F_1(X)$, $F_2(X)$, $F_3(X)$, and $F_4(X)$ are defined in Section IV.

a) Constraint Handling: To handle infeasible solutions arising from random initialization or genetic operators, penalty terms are imposed in proportional to constraint violation magnitudes.

Algorithm 1: Two stage priority guided GA framework for EV charging/discharging schedulig

Input : Set of EVs $\mathbb{N}$, number of chargers M, time horizon T, charging/discharging power, tariff profile, grid limit $P_{\max}$, GA parameters $(pop_size, G_{\max}, p_c, p_m)$

Output: Optimized charging/discharging schedule $p_{i,t}$

```
begin
    Stage I: Priority Based Charger Assignment
    for t = 0 to T − 1 do
        for EV i ∈ N at slot t do
            Compute urgency factor φ_i(t)
            Compute degradation factor D_i^factor(t)
            Compute grid stress factor G_t^factor(t)
            Compute price factor P_t^factor
            Compute priority score λ_i(t)
        end
        Sort EVs in descending order of λ_i(t)
        Assign top M EVs to chargers till target SoC
          achieved
    end
    Let 𝒜 be the set of EVs admitted during Stage-I
    Stage–II: GA Based Power Optimization
    Initialize pop_size
    Encode each chromosome p_{i,t} for all i ∈ 𝒜
    Check for valid t and p_{i,t} to EV power limits
    for chromosome X do
        Compute fitness
          J = w_1 F_1 + w_2 F_2 + w_3 F_3 − w_4 F_4 + Ω(X)
                        ▷ equation 32
    end
    iter ← 1
    while iter ≤ G_max do
        Select parents via tournament selection
                        ▷ Selection phase
        With probability p_c, perform SBX crossover on
          parent pairs
                        ▷ Crossover phase
        With probability p_m, apply polynomial
          mutation to each gene
                        ▷ Mutation phase
        check for all constraints
        iter ← iter + 1
    end
    return p*_{i,t} from best chromosome in final
      population;
end
```

- SoC violation: when $\mathrm{SoC}_i(t)$ lies outside $[0,1]$, mathematically, the penalty imposed for SoC breach is expressed as:

$$V_{i,t}^{\mathrm{SoC}} = \begin{cases} 0, & 0 \le \mathrm{SoC}_i(t) \le 1, \\ \mathrm{SoC}_i(t) - 1, & \mathrm{SoC}_i(t) > 1, \\ |\mathrm{SoC}_i(t)|, & \mathrm{SoC}_i(t) < 0. \end{cases} \tag{29}$$

- Grid capacity violation: When aggregate load exceeds $P_{\max}$ and the violation magnitude is computed as the amount of excess power over this limit:

$$V_t^{\mathrm{grid}} = \max(0, P_{\mathrm{agg}}(t) - P_{\max}). \tag{30}$$

The total violation penalty is then expressed as

$$\Omega(X) = \alpha_1 \sum_{i,t} V_{i,t}^{\mathrm{SoC}} + \alpha_2 \sum_t V_t^{\mathrm{grid}} \tag{31}$$

with α_1, α_2 as penalty coefficients, multiplied by normalized violations and can be chosen equally so that $\alpha_1 + \alpha_2 = 1$ during experiments so that the respective penalty for violation can be imposed. Hence, the overall fitness is then obtained as a weighted sum of the objective terms and penalties:

$$J = w_1 F_1(X) + w_2 F_2(X) + w_3 F_3(X) - w_4 F_4(X) + \Omega(X) \tag{32}$$

Since the GA selection operator relies on relative ranking of penalized fitness, chromosomes incurring large SoC or grid violations obtain higher J values and are naturally suppressed during tournaments, while feasible or minimally violating power schedules are promoted across generations. Once the fitness of each chromosome is evaluated, the GA employs evolutionary operators to guide the population toward improved schedules across generations, which are as follows:

3) Selection: A tournament selection mechanism is used to favor fitter chromosomes while retaining diversity in the population. In each tournament, a subset of chromosomes is randomly chosen and the one with the lowest fitness score J is selected as a parent. This balances exploration and exploitation by allowing less fit solutions rarely win during tournament.

4) Crossover: To generate new candidate schedules, pairs of parent chromosomes undergo simulated binary crossover (SBX). For each gene $x_{i,t}$, offspring inherit values that are intermediate to those of their parents with a distribution controlled by the crossover index η_c and crossover probability p_c.

5) Mutation: To introduce additional diversity, polynomial mutation is applied to individual genes with probability p_m. For a selected gene $x_{i,t}$, the mutation operator perturbs its value by a small amount proportional to the distance from its lower and upper bounds $[-P_i^{\mathrm{dis,max}}, P_i^{\mathrm{ch,max}}]$. This controlled perturbation helps escape local optima while maintaining feasibility with respect to EV charging and discharging limits.

VI. Experiments and Analysis

This section discusses various experimental results in order to validate the efficacy of the Proposed framework and demonstrate our findings.

A. Simulation Parameter settings

We perform extensive simulations against proposed scheduling method for EV charging and discharging using python. We developed the simulation environment integrating synthetic data for EVs, charger, and grid specifications. The EV fleet exhibits heterogeneous battery configurations, with 70% compact vehicles (35-55 kWh) and 30% SUVs (70-100 kWh). The initial SoC is sampled uniformly within the range 0.05-0.70, while the minimum allowable SoC lies between 0.05-0.20 and the maximum target value is fixed at 0.95. Charger power ratings are 3.6, 7.0, 11.0, and 22.0 kW, representing common workplace charging infrastructure [26]. Parking operational time is of 12 hours between 08:00 AM to 08:00 PM, capturing typical office and commercial parking behavior. Battery degradation cost coefficients is taken to be $\mu = 0.02\$/kWh$. Electricity tariffs include purchase price $\pi_{\mathrm{buy}} = 0.10 - 0.50\$/kWh$ and V2G revenue rate $\pi_{\mathrm{rev}} = 0.05 - 0.30\$/kWh$. The charging infrastructure consists of $M = 30$ chargers with a maximum grid power capacity of $P_{\max} = 100$ kW and an average base load is 10 kW. At most M EVs may be simultaneously active in any time slot. The scheduling horizon is discretized into $T = 48$ slots of duration $\Delta\delta = 0.25$ hrs. The GA is configured with a population size of 120, upto 300 generations, a crossover probability of 0.9, mutation probability of 0.4, tournament selection of size 3.

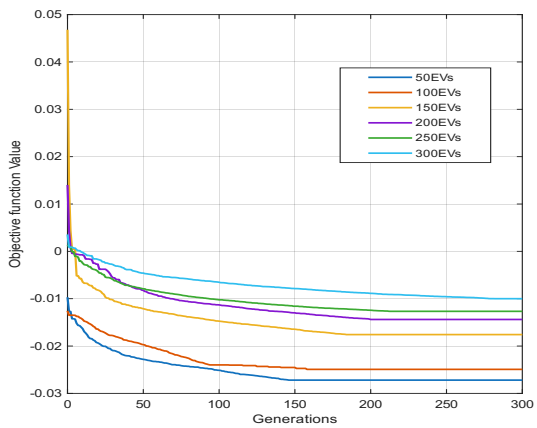

Fig. 2: Illustrating the convergence of our proposed algorithm

B. Convergence Analysis

The GA convergence behavior is evaluated for five EV fleet sizes varying from 50-300 under identical experimental parameter settings as defined earlier in Sections VI-A. The best objective function value (minimum J) of each generation is plotted against the number

of generations as shown in Fig. 2. A monotonically decreasing trend is observed in all cases, indicating consistent improvement in the fitness of chromosomes as the GA evolves through successive generations. Larger fleets exhibit stronger fluctuations during the initial generations, which is expected due to higher competition for limited chargers. Smaller fleets show comparatively smoother and faster fitness decline, showing that algorithm converges fast for less congestion, as decision variables will also be comparatively lesser, which validates the scalability of the proposed two stage framework where feasibility is implicitly governed through constraints and fitness ranking is driven by penalized objective values.

C. Effect of Fleet Size on:

1) Average energy cost: As shown in Fig. 3(a), the energy cost per EV is compared against FCFS, SJF, and the proposed Priority+GA framework for increasing EV fleet sizes (50-300). A consistent trend is observed for the proposed method yields the lower average cost, while FCFS exhibits the highest cost. Under FCFS, charger allocation strictly follows arrival order, which ignores price trend and urgency, leading to inefficient charging during expensive periods and consequently higher per EV cost. It is observed that, SJF improves upon FCFS and proposed method by prioritizing EVs with smaller energy requirements; however, this greedy strategy favors shorter jobs but fails to meet the urgency and other criteria, which can be seen in other results.

2) Average degradation cost: It is observed in Fig. 3(b), the proposed method consistently achieves the lowest degradation cost per EV across all fleet sizes. This improvement comes from the coordinated two stage design: Stage-I prioritizes EV admission based on urgency and degradation sensitivity to avoid excessive charger competition, while Stage-II again applies GA based power scheduling to suppress aggressive charging discharging patterns through degradation aware fitness evaluation. In contrast, FCFS assigns chargers solely based on arrival order, which often forces late arriving EVs to charge at higher power levels to meet departure constraints, thereby accelerating battery degradation. However, SJF prioritizes EVs with shorter charging requirements, which reduces waiting time but repeatedly favors low energy demand EVs, resulting in higher power charging cycles and increased degradation for a higher energy demand vehicles. The proposed method mitigates these effects by distributing energy delivery more evenly over time and decreasing overall degradation.

3) Grid Load variance: Fig. 3(c) compares the grid load variance resulting from FCFS, SJF, and the proposed Priority+GA framework with increasing EV fleet size showing the degree of fluctuation in aggregate power demand over time, where lower values indicate smoother and more grid friendly charging behavior. As expected, the proposed method consistently achieves the lowest grid load variance across all EV sizes, demonstrating its superior ability to regulate charging and discharging activities in a coordinated manner. Under FCFS, EVs are charged immediately upon arrival without considering system-level conditions, leading to charging peaks and higher load fluctuations. While SJF partially alleviates this issue by prioritizing EVs with smaller energy requirements, but its greedy nature still results in clustered charging patterns and insufficient load smoothing. In contrast, the proposed framework integrates grid stress awareness during scheduling resulting in the overall reduction in grid load variance.

4) User Satisfaction per EV: Fig. 4(a) demonstrates the average user satisfaction per EV achieved by FCFS, SJF, and the proposed Priority+GA framework that reflects the extent to which individual EVs reach their target SoC within their available parking duration. As the number of EVs increases, satisfaction levels decrease across all methods due to intensified competition for limited charging resources. In case of FCFS, EVs are served strictly in order of arrival, which often leaves late arriving EVs undercharged, resulting in a sharp drop in satisfaction as congestion increases, but still it performs better than other algorithms for user satisfaction ignoring other criterias which makes it worse for other objectives. However, the proposed method consistently achieves better tradeoff, demonstrating its ability to balance individual charging requirements with system level constraints. SJF improves satisfaction for EVs with smaller energy demands by prioritizing shorter charging jobs, but as the urgent EVs are repeatedly deferred, leading to uneven satisfaction among users.

5) Avg. waiting time for charger assignment: As shown in Fig. 4(b) the average waiting time per EV under FCFS, SJF, and the proposed Priority+GA framework is compared which represents the duration an EV remains queued before being granted access to a charging point. As the EV population increases, waiting time rises for all scheduling strategies. It is observed that the proposed method achieves the lowest average waiting time across all fleet sizes, indicating more efficient and fair charger allocation. In FCFS,average waiting time increases sharply with fleet size because charger access is determined solely by arrival order. However in case of SJF, the greedy policy leads to starvation of large demanding EVs, resulting in higher average waiting times during congestion.

6) Fairness(using gini coefficient): Fig.4(c) illustrates the fairness per EV achieved by FCFS, SJF, and the proposed Priority+GA framework reflecting the uniformity in service quality among EV users, accounting for disparities in achieved SoC, waiting time, and charging opportunities.It is observed that, the proposed method consistently attains the highest fairness across all EV sizes (lower the gini coefficient value, higher the fairness), indicating a more equitable distribution of charging service among users. In FCFS, fairness deteriorates rapidly with increasing EV count, which inherently disadvantageous for late arriving EVs regardless of urgency or energy requirements. SJF further reduces the fairness by repeatedly favoring EVs with smaller charging demands, particularly under high

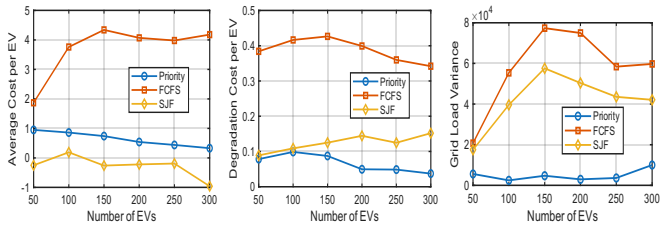

(a) (b) (c)

Fig. 3: The impact of fleet size on the (a) Avg cost per EV. (b) avg. degradation cost (c) load variance of grid

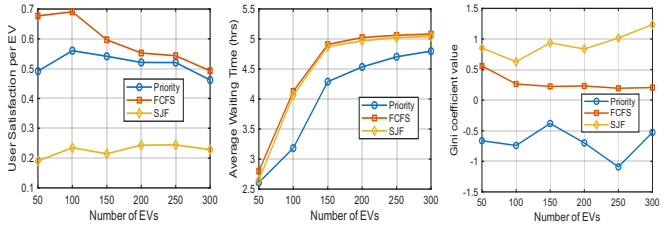

(a) (b) (c)

Fig. 4: The impact of fleet size on the (a) user satisfaction (b) avg. waiting time for charger assignment (c) Fairness(using gini-coefficient)

congestion. In contrast, the proposed framework explicitly incorporates urgency, remaining energy demand, and degradation sensitivity, ensuring that EVs with higher service criticality are not persistently deprived of charging access. The GA based power scheduling in Stage-II further balances energy delivery across EVs through fitness ranking and penalty mechanisms.

VII. Summary of the Results

The performance of the proposed two stage Priority+GA scheduling framework is evaluated against classical FCFS and SJF baselines under increasing EV fleet sizes. Across all scenarios, the proposed method consistently achieved superior performance in terms of economic efficiency, grid stability, and user centric metrics. Specifically, it resulted in the lowest average energy cost per EV by effectively exploiting price aware charging and controlled V2G participation. Battery degradation cost is significantly reduced due to degradation aware priority admission and fitness based suppression of aggressive charge discharge patterns. The aggregate grid load variance is also minimized, demonstrating smoother load profiles and improved grid friendliness under high EV penetration.

From a service quality perspective, the proposed framework yielded the lowest average waiting time while maintaining the higher user satisfaction and fairness levels, indicating balanced and equitable charger access even under congestion. In contrast, FCFS suffered from high waiting times and poor fairness due to its arrival order policy, while SJF showed biased behavior favoring low demand EVs, leading to starvation of urgent vehicles. The GA convergence analysis further confirmed that the second stage optimizer steadily improves solution quality and scales consistently with problem size, requiring more iterations for larger fleets due to increased dimensionality. Overall, the results validate that the proposed framework effectively balances system level objectives and individual user requirements, outperforming conventional scheduling strategies across all evaluated metrics.

VIII. Conclusion

This paper proposed a two stage EV charging discharging scheduling framework that integrates priority based charger admission with GA based power optimization for workplace parking scenario. The first stage ensures fair and urgency aware charger assignment under limited infrastructure, while the second stage optimizes continuous charging and discharging decisions over the entire scheduling horizon. Extensive simulation results across increasing EV fleet sizes demonstrate that the proposed framework consistently outperforms classical FCFS and SJF strategies in terms of energy cost, battery degradation, grid load variance, waiting time, user satisfaction, and fairness. The convergence analysis further confirms that the GA reliably improves solution quality over generations and scales gracefully with growing problem dimension. These results collectively validate the effectiveness of the proposed approach in balancing user centric objectives with grid level constraints under high congestion.

Future work may extend the proposed framework in several directions. First, congestion based electricity tariffs can be incorporated to capture real time operational uncertainty. Second, adaptive or learning based weight tuning may be explored to dynamically balance cost, degradation, and fairness objectives under changing grid condition are promising directions to further enhance the practicality and scalability of the proposed scheduling framework.

References

[1] "Iea (2023), global ev data explorer, iea, paris," https://www.iea.org/data-and-statistics/data-tools/global-ev-data-explorer.

[2] M. Masud Rana, S. M. Mahfuz Alam, F. Allahma Rafi, S. Bashu Deb, B. Agili, M. He, and M. Hasan Ali, "Comprehensive review on the charging technologies of electric vehicles (ev) and their impact on power grid," *IEEE Access*, vol. 13, pp. 35 124–35 156, 2025.

[3] S. S. A. Salam, V. Raj, M. I. Petra, A. K. Azad, S. Mathew, and S. M. Sulthan, "Charge scheduling optimization of electric vehicles: A comprehensive review of essentiality, perspectives, techniques, and security," *IEEE Access*, vol. 12, pp. 121 010–121 034, 2024.

[4] H. M. Al-Alwash, E. Borcoci, M.-C. Vochin, I. A. M. Balapuwaduge, and F. Y. Li, "Optimization schedule schemes for charging electric vehicles: Overview, challenges, and solutions," *IEEE Access*, vol. 12, pp. 32 801–32 818, 2024.

[5] C. Z. El-Bayeh, K. Alzaareer, A.-M. I. Aldaoudeyeh, B. Brahmi, and M. Zellagui, "Charging and discharging strategies of electric vehicles: A survey," *World electric vehicle Journal*, vol. 12, no. 1, p. 11, 2021.

[6] Y. He, B. Venkatesh, and L. Guan, "Optimal scheduling for charging and discharging of electric vehicles," *IEEE transactions on smart grid*, vol. 3, no. 3, pp. 1095–1105, 2012.

[7] R. J. G. J. M. R. . B. S. N. Fernandes, X., "On-off scheduling schemes for power-constrained electric vehicle charging," *4OR*, vol. 15, no. 2, pp. 163–181, 2021.

[8] R. Khezri, D. Steen, E. Wikner, and L. A. Tuan, "Optimal v2g scheduling of an ev with calendar and cycle aging of battery: An milp approach," *IEEE Transactions on Transportation Electrification*, vol. 10, no. 4, pp. 10 497–10 507, 2024.

[9] M. Thirumalai, T. Yuvaraj, M. Bajaj, and V. Blazek, "Multi-objective coordinated optimization of renewable-based ev charging stations with user-centric scheduling and grid support in distribution networks," *e-Prime - Advances in Electrical Engineering, Electronics and Energy*, vol. 14, p. 101111, 2025.

[10] S. Das, N. K. Yadav, and P. K. Jangilwar, "A multi-objective-based coordinated electric vehicle charging and discharging scheduling for grid support and cost efficiency," *Journal of Energy Storage*, vol. 139, p. 118789, 2025.

[11] B. Chauhan and S. K. Jain, "Scheduling of electric vehicle's power in v2g and g2v modes using an improved charge–discharge opportunity-based approach," *IEEE Transactions on Transportation Electrification*, vol. 10, no. 1, pp. 811–822, 2023.

[12] W. Wang and L. Wu, "A semi-decentralized real-time charging scheduling scheme for large ev parking lots considering uncertain ev arrival and departure," *IEEE Transactions on Smart Grid*, vol. 15, no. 6, pp. 5871–5884, 2024.

[13] L. Cai, G. Guo, and D. Wu, "A cooperative multi-agent charging scheduling by regrouping evs with differentiated deadlines," *IEEE Transactions on Intelligent Transportation Systems*, 2025.

[14] W. Kong, H. Ye, and Y. Ge, "Robust price-based ev load management considering human-choice uncertainty," *IEEE Transactions on Transportation Electrification*, vol. 11, no. 1, pp. 29–41, 2024.

[15] B. Lao, X. Zhang, D. Liu, and Y. Zou, "Reinforcement learning-based optimal scheduling strategy for charging and discharging of electric vehicle clusters," *Sustainable Energy, Grids and Networks*, vol. 45, p. 102087, 2026.

[16] T. Panayiotou and G. Ellinas, "Fair-enough charging of electric vehicles," in *2024 IEEE 99th Vehicular Technology Conference (VTC2024-Spring)*. IEEE, 2024, pp. 01–06.

[17] K. Pan, C.-D. Liang, and M. Lu, "Optimal scheduling of electric vehicle ordered charging and discharging based on improved gravitational search and particle swarm optimization algorithm," *International Journal of Electrical Power & Energy Systems*, vol. 157, p. 109766, 2024.

[18] H. Ko, S. Pack, and V. C. Leung, "Mobility-aware vehicle-to-grid control algorithm in microgrids," *IEEE Transactions on Intelligent Transportation Systems*, vol. 19, no. 7, pp. 2165–2174, 2018.

[19] W. Wu, Y. Lin, R. Liu, Y. Li, Y. Zhang, and C. Ma, "Online ev charge scheduling based on time-of-use pricing and peak load minimization: Properties and efficient algorithms," *IEEE Transactions on Intelligent Transportation Systems*, vol. 23, no. 1, pp. 572–586, 2020.

[20] C. Yao, S. Chen, M. Salazar, and Z. Yang, "Joint routing and charging problem of electric vehicles with incentive-aware customers considering spatio-temporal charging prices," *IEEE Transactions on Intelligent Transportation Systems*, vol. 24, no. 11, pp. 12 215–12 226, 2023.

[21] N. I. Nimalsiri, E. L. Ratnam, D. B. Smith, C. P. Mediwaththe, and S. K. Halgamuge, "Coordinated charge and discharge scheduling of electric vehicles for load curve shaping," *IEEE Transactions on Intelligent Transportation Systems*, vol. 23, no. 7, pp. 7653–7665, 2021.

[22] M. Tan, Z. Zhang, Y. Ren, I. Richard, and Y. Zhang, "Multi-agent system for electric vehicle charging scheduling in parking lots," *Complex System Modeling and Simulation*, vol. 3, no. 2, pp. 129–142, 2023.

[23] M. Shariatzadeh, C. Henggeler Antunes, and M. A. Lopes, "Charging scheduling in a workplace parking lot: Bi-objective optimization approaches through predictive analytics of electric vehicle users' charging behavior," *Sustainable Energy, Grids and Networks*, vol. 39, p. 101463, 2024.

[24] T. Wang, D. Song, L. Jiang, K. Zhou, and Z. Wang, "Multi-objective predictive scheduling of electric vehicle charging under dynamic grid constraints: An imogwo with redundancy awareness," *Electric Power Systems Research*, vol. 254, p. 112677, 2026.

[25] X. Pang, X. Wang, Y. Yu, H. Jiang, and Z. Zheng, "Optimal scheduling for electric vehicle charging and discharging via double q-learning-based multi-objective particle swarm optimization," *Energy*, vol. 339, p. 139133, 2025.

[26] A. Mathioudaki, G. Tsaousoglou, E. Varvarigos, and D. Fotakis, "Online menu-based scheduling of electric vehicle charging," *IEEE Transactions on Smart Grid*, 2025.